MCIB
Marine Casualty Investigation Board

REPORT INTO THE CIRCUMSTANCES SURROUNDING THE LOSS OF PROPULSION ON BOARD THE PASSENGER RO-RO MOTOR VESSEL 'STENA EUROPE' ON 30TH JANUARY 2003 SHORTLY AFTER DEPARTING ROSSLARE EUROPORT

The Marine Casualty Investigation Board was established on the 25th March, 2003 under The Merchant Shipping (Investigation of Marine Casualties) Act 2000

CONTENTS

ACKNOWLEDGEMENT.

The preliminary investigation into this incident was conducted jointly with the Marine Accident Investigation Branch (MAIB) of the United Kingdom Department for Transport.

The Marine Casualty Investigation Board would like to thank the MAIB for the information furnished and for the Preliminary Examination Report provided. Some of the findings and recommendations of the MAIB are reproduced in this Report.

1. SYNOPSIS

1.1 "Stena Europe", a 24,828 tonne ro-ro passenger ferry departed Rosslare Europort on 30th January 2003 at 12.09 hours for Fishguard, Wales with 155 passengers and 65 crew on board.

1.2 Approximately 30 minutes later the vessel suffered a complete loss of propulsion and drifted down onto and then past the Tuskar Rock Lighthouse off the Co. Wexford coastline.

1.3 Emergency services were alerted to the situation and the vessel regained full propulsion by 14.00 hours. The situation was declared under control and the "Stena Europe" continued on its voyage to Pembroke without further incident.

- ALL TIMES ARE LOCAL TIMES.

2. FACTUAL INFORMATION

2.1

Name	Stena Europe
Port of Registry	Fishguard
IMO No	7901760
Flag	United Kingdom
Built	Gothenburg, Sweden, 1982
Type of Vessel	Ro-Ro Passenger Ferry
Management Company	Stena Line Limited
Dimensions	LOA 149.03m Breadth 26.00m Draft Max 6.12m
Speed	20.5 knots maximum 18.0 knots normal
Tonnage	GT 24828 NT 11968 DWT 2720
Class	DNV +1A1, Ice 1c, Car Ferry A
Main Engines	4 x Wartsila Vasa 12V 32A 3840 kW each. Total 15360 kW
Auxiliary Engines	3 x Wartsila Vasa 4R 32A 1240kW each. Total 3720 kW
Bow Thruster	2 x KaMeWa 736 kW each
Steering	Twin Rudder Electro-hydraulic Rotary Vane.
Crew on board at time of incident	65
Passengers on board at time of incident	155 - Maximum capacity 1386 persons

2.2 ENGINE ROOM CONFIGURATION AND DESCRIPTION.

2.2.1 "Stena Europe" has four main engines located in the main engine room compartment. These are numbered 1, 2, 3 & 4., 1 & 2 engines are on the starboard side, 3 & 4 engines are on the port side.

2.2.2 Three diesel driven electrical generators are located in a separate adjacent compartment forward numbered 1,2 & 3 from starboard.

2.2.3 Three start air compressors and two start air receivers are located forward of the generator compartment. Normal operating pressure of the start air system would be 28 – 30 bar when fully charged. Two start air compressors are set to run automatically to keep the air receivers constantly charged up.

2.2.4 In common with many ships of this type the main engines and generator jackets are cooled by a high temperature (HT) system circulating through plate type coolers fed by a low temperature (LT) cooling system. The LT cooling system will also cool lube oil coolers, scavenge coolers, air compressors, hydraulic oil coolers etc.

The LT system is in turn cooled by sea water coolers.

2.2.5 The LT and HT systems are capable of being divided into separate port and starboard side systems. This would be the normal running position in order to provide a degree of redundancy. The port side systems supply No 2 and No 4 main engines and No 3 generator. The starboard side systems supply No 1 and No 3 main engines, No 1 & No 2 generators and the air compressors.

2.2.6 The HT and LT systems share a common 'header' or expansion tank. In addition they are joined by a piping system, which allows some mixing of HT/LT for temperature control (See Appendix 8.1).

3. CIRCUMSTANCES PRIOR TO INCIDENT

3.1 Stena Line U.K took delivery of the "Stena Europe" from its parent company Stena Line in March 2002. The vessel operated its Fishguard – Rosslare Europort route in the Irish Sea from this time until the incident. Records held on board show that the main engine overhauls were all completed on time and according to manufacturers instructions. Stena Line overhauled no.s 2,3 & 4 engines in May 2001, June 2001 and January 2002 respectively. Stena Line U.K. overhauled no 1 engine in September 2002.

3.2 "Stena Europe" lay alongside in Rosslare Europort on 30th January whilst loading passengers and cars. During this time No 1 & No 2 generators were running to supply the ships electrical load and the main engines were shut down. Cross connection valves were left open which allowed the cooling water from the running generators to circulate through all the shut down engines thereby keeping them warm.

3.3 Following pre-departure checks "Stena Europe" departed Rosslare Europort at 12.09 hours on 30th January 2003 for Fishguard in Wales with 155 passengers and 65 crew on board. The engine room was attended by the Chief Engineer, two watch keeping engineers and a motorman. All four main engines were engaged for departure standby and all three generators were connected to supply the ships electrical load. Electrical load for the bowthrusters was supplied by generators driven by power take - off shafts from the main engine gearboxes. The stabilisers were put out shortly before reaching the South Long Buoy. Weather at the time was reported as northerly winds, force 7 to gale force 8, wind speed 27 to 30 knots gusting to 49 knots, sunny and dry with good visibility. The sea state was rough with a significant wave height of 3.6 meters (See Appendix 8.2).

3.4 The scheduled departure time was 09.30 hours but the vessel was delayed by poor weather. The expected departure time on this day was 12.30 hours however the Chief Engineer had been advised of the earlier departure time by the Master. The vessel passed the South Long Buoy at 12.26 hours.

4. THE INCIDENT

4.1 Engine Room

4.1.1 At 12.35 hours the port side low temperature cooling water (LTCW) pump supplying no.s 2 and 4 main engines started automatically.

4.1.2 The port side LT CW pump cut in was followed almost immediately by No 2 main engine 'cooling water temperature high' alarm and a fire alarm indicating a fire in the auxiliary engine room. An engineer was sent to investigate the fire alarm. He noted water and steam coming from the area of the cooling water header tanks.

4.1.3 Shortly after this there was a 'high exhaust' alarm on No 2 main engine unit B3 and a portside low temperature cooling water 'low pressure' alarm followed by the auto start of the starboard side standby low temperature cooling water pump and starboard side low temperature cooling water 'low pressure' alarm.

4.1.4 An 'oil mist in crankcase' alarm sounded for No 2 main engine and the Chief Engineer telephoned the bridge to advise them that he wished to shut this engine down. There was no answer from the bridge and as the Chief went to transfer the load from No 2 he noticed that No 1 had already shut itself down.

4.1.5 At 12.38 hours No 1 main engine stopped automatically on 'high temperature'. No 2 main engine was stopped manually at 12.40 hours. At 12.41 hours No 3 main engine stopped automatically on 'high temperature' and No 4 main engine stopped automatically on 'high temperature' at 12.45 hours. (The times were taken from the engine room log – it is likely that the alarm log printout time was not set accurately).

4.2 Bridge

4.2.1 As the vessel was still on standby the Master was on the bridge together with the officer of the watch and the helmsman.

4.2.2 At about 12.30 hours an engine room fire detector sounded an alarm on the bridge and the Master noted that the running indication light for one of the starboard main engines had gone out.

4.2.3 The engine room confirmed by telephone that an engine had stopped and that the cause of the fire alarm was being investigated.

4.2.4 Shortly before 12.40 hours all propulsion was lost.

5. EVENTS AFTER THE INCIDENT

5.1 Engine Room

5.1.1 It was apparent to the engineers on watch that the cause of the engines stopping was the loss of cooling water from the high and low temperature cooling water circuits. It was also apparent that the systems had some form of air or gas leak into them due to the fact that the header tanks were being 'blown out'.

5.1.2 The Chief Engineer summoned additional help to the engine room. Four engineers and the electrician arrived in the engine control room to assist.

5.1.3 The cooling water header tanks were filled up and the systems vented of air. This operation was completed at about 13.10 hours.

5.1.4 Whilst the cooling water systems were being refilled the main engine start air compressors were shut down in an attempt to identify and isolate the source of air into the system. Each compressor was restarted in turn and no pressure fluctuations were noticed that would indicate an air leak into the cooling water system from the air compressors.

5.1.5 Whilst the main air compressors were shut down air pressure in the online main air receiver dropped to about 8 bar which was below the pressure at which the main engines could be started. The three air compressors were run in order to recharge the air receiver. This took about 20 minutes.

5.1.6 The air pressure was raised to about 12 bar and an attempt was made to start No. 4 main engine. This failed. The online air receiver was closed off to the system and the offline air receiver was opened up. This then gave a system pressure of about 20 bar.

5.1.7 No. 4 main engine was started and clutched in and gave propulsion on the port side at 13.35 hours. An attempt was made to start no. 2 main engine (which was on the starboard side) in order to give propulsion on the opposite shaft.

5.1.8 Immediately No. 2 main engine started the cooling water pressures started to fluctuate and the header tanks started to overflow, indicating a problem with number two main engine. This was then shut down. The air pressure was now down to 14 bar.

5.1.9 As the start air receivers were refilled with air to a pressure of about 18 bar, the remaining engines were started with No 1 main engine (starboard) started at 13.51 hours followed by No 3 (port) at 13.55 hours.

5.1.10 During this period the ships main generators remained running and on load. Although they share the LT and HT cooling water system they have engine driven cooling water pumps. Load on the generators was reduced by shedding non-essential services.

5.1.11 The bridge requested the use of the bowthruster, which was started after the fin stabilisers were retracted. The bowthruster was not used to any great extent.

5.1.12 Following arrival at Fishguard an internal and external investigation was started to determine the cause of the engine failures, involving the Irish Marine Casualty Investigation Board (MCIB), U.K. Marine Accident Investigation Branch (MAIB), the U.K. Maritime Coast Guard Agency (MCA) and Stena Line U.K.

5.1.13 Subsequent investigation and inspection of No 2 main engine revealed a cylinder head holding down stud broken on unit B3. This would have weakened the cylinder head to liner seal and allowed combustion gasses into the cooling water jacket.

5.1.14 The HT cooling water system cross connection valves V15 and V36 were found to be open, allowing the entire engine cooling system on the port and starboard sides to be adversely affected.

5.2 Bridge

5.2.1 Following the loss of propulsion on both shafts the bridge team carried out an evaluation of the situation.

5.2.2 The vessel was about 2.1 miles north north west of the Tuskar Rock Lighthouse in position 520 14'N 0060 14'W. The wind was NNW'ly according to the Masters account, gusting to 40 knots and an ebb tide was running in a southwesterly direction.

5.2.3 The Engine Room was contacted again and the Chief Engineer confirmed the loss of propulsion. He advised that propulsion could not be restored immediately.

5.2.4 The bridge team monitored the vessels drift by radar and electronic chart and it became apparent that provided the drift remained constant the vessel would be carried clear of hazards into the channel between Tuskar Rock and the Irish coast. The vessels position and projected drift was also plotted on to the paper charts.

5.2.5 A PAN PAN message was sent at 12.40 hours advising that the vessel was drifting. This was picked up by the Irish Coast Guard and Milfordhaven Coast Guard. The Master commenced dialogue with Milfordhaven Coast Guard advising them of the situation. Shortly after the initial contact with Milfordhaven co-ordination of the incident was transferred to the Irish Marine Rescue Coordination Centre Dublin via Rosslare Coast Guard Radio Station.

5.2.6 The bridge team ordered both the forward anchors cleared away for immediate deployment, however once the vessel passed Tuskar Rock and was being carried clear of hazards anchoring the vessel was not considered to be an option.

5.2.7 Tug assistance was requested from the 'Oysterbank', which was lying at Rosslare Europort. The 'Oysterbank' was not permanently stationed at Rosslare Europort and was there on another contract. The tug advised the "Stena Europe" that it could mobilise and was requested to do so.

5.2.8 Helicopter assistance was requested via MRCC Dublin to evacuate 155 passengers.

5.2.9 While the vessel drifted without propulsion the bridge team plotted the ships position at regular intervals. The vessels drift as shown on the attached charts brought it clear of hazards between Tuskar Rock and the Irish coast (See Appendix 8.3). Its closest point of approach was about 8 cables (1450m) from the outlying dangers adjacent to Tuskar Rock Lighthouse and about 3 cables (550m) to the west of an 8.8m patch while drifting at between 4 and 6 knots.

5.2.10 During the vessels drift the passengers and crew were kept informed of the developing situation by the Master at about 15 minute intervals. As it became apparent that the vessel was drifting out of danger the Master decided not to order the vessel to General Emergency Stations to preserve calm on board and not to cause undue alarm.

5.2.11 There does not appear to have been any unease or panic amongst the passengers in spite of the presence of the rescue services.

5.2.12 The Masters account shows that the first main engine was started at 13.30 hours on the port shaft and propulsion was restored to the starboard shaft at 13.51 hours.

5.2.13 The emergency services were stood down at 14.00 hours following the restoration of propulsion and the vessel resumed its passage to Pembroke due to weather conditions at Fishguard.

5.3 Response from shore

Compiled and synopsised from MRCC Dublin Radio log and Dublin Coast Guard transcripts. Times differ slightly.

1240 local time MRCC Dublin pick up a PAN PAN message on VHF Radio channel 16 from "Stena Europe". The vessel reported 'broken down off Tuskar Rock' and MRCC Dublin acknowledged.

1241 "Stena Europe" reported its position to Milford Haven Coastguard advising them of the situation.

1242 Milfordhaven Coastguard asks "Stena Europe" if anchors available. "Stena Europe" confirms anchors available and bowthruster to be available soon.

1243 "Stena Europe" advise Milfordhaven Coastguard that tug assistance has been requested from Rosslare Europort with an ETA of 20 to 30 minutes

1243 "Stena Europe" advise Milfordhaven Coastguard that the Normandy has passed inbound to Rosslare Europort but considered it too dangerous to attempt a tow.

1244 Milfordhaven Coastguard handover co-ordination of rescue to MRCC Dublin

1245 MRCC Dublin appraised by "Stena Europe" of the situation on board. Numbers on board and position of vessel.

1246 Research vessel 'Celtic Voyager' offers assistance to MRCC Dublin. 'Celtic Voyager' requested to proceed to assist. ETA approx 1 hour.

1248 "Stena Europe" requests MRCC Dublin to arrange evacuation of passengers by helicopter. Rosslare Lifeboat tasked to assist.

1249 Milfordhaven Coastguard offers air support to MRCC Dublin from ARCC Kinloss. MRCC Dublin confirm acceptance of air support.

1251 Helicopter tasked from Waterford to assist. R117

1254 SAR Helicopter from Dublin tasked to assist. R116

1254 RCC Kinloss confirm two helicopters tasked, one from Chivenor in Devon R122 and one from Valley in Wales R169, and one Nimrod R51 aircraft for top cover.

1255 Kilmore Quay lifeboat tasked. Rosslare Europort "Major Emergency Plan" activated. "Stena Europe" advise MRCC Dublin that vessel appears to be clearing all obstructions and declines to upgrade situation to 'MAYDAY'

1300 Kilmore Quay Lifeboat launched. ETA 45 minutes from "Stena Europe"

1303 Arklow Lifeboat launched

1304 Wexford Gardai advised of evacuation from ferry and confirm that they are getting organised. "Stena Europe" confirms to MRCC Dublin no progress with engines and still wishes to proceed with the option of evacuation.

1309 "Celtic Voyager" advise MRCC Dublin ETA 1 hour due to direction and speed of drift of "Stena Europe"

1311 R117 taking off from Waterford. Helicopter from Valley ETA 30 minutes. Helicopter from Chivenor ETA 1 hour. Nimrod no available ETA. Irish Naval vessel LE Niamh confirmed proceeding to assist.

1313 Rosslare lifeboat launched (1311 MRCC Dublin transcript)

1313 Vessel "Karen Ann" offers assistance ETA 2 hours.

1330 "Stena Europe" and MRCC Dublin maintain contact. "Stena Europe" advise vessel drifting clear of nearest land and passengers will remain on board. Awaiting arrival of tug and suggest not to stand down air support at this time.

1331 (1329 MRCC Dublin) "Stena Europe" confirms to MRCC Dublin propulsion restored to one engine.

1332 R117 Waterford on scene and advise "Stena Europe" that if required evacuation will be from aft end.

1334 Tug "Oysterbank" on scene

1336 Rosslare Coast Guard Unit tasked to Rosslare Europort.

1338 Fishing vessel ‘Horndrift’ reports to MRCC Dublin leaving Kilmore Quay and can be of assistance. Not required.

1341 "Karen Ann" stood down. Rosslare Lifeboat standing by on scene.

1347 R116 Dublin and R122 Chivenor reported on scene.

1349 Kilmore Quay lifeboat on scene

1355 "Stena Europe" advises MRCC Dublin one engine operational second engine started and stopped.

1401 "Stena Europe" advises MRCC Dublin that 3 engines operational and passage resumed. R169 stood down.

1404 Rosslare Lifeboat and Rosslare Coastguard Unit stood down

1407 Arklow Lifeboat and LE Niamh stood down

1414 'Rosslare Harbour' Major Emergency Plan stood down

1430 All lifeboats, rescue aircraft and assisting vessels stood down. PAN PAN cancelled

6. CONCLUSIONS

6.1 The loss of cooling water from the system was a direct result of a cylinder head holding down stud failure on No. 2 main engine B3 unit.

6.2 This stud failed at the end of its thread situated in the engine entablature. The failure was initiated by corrosion which was brought on by water leakage past an O-ring seal which collected around the thread.

6.3 The loose stud allowed the cylinder head to liner joint seal to be lost with the result that combustion gases passed from the cylinder, under pressure, into the cooling system. The combustion gasses displaced the water in the system through the header tanks.

6.4 Marks on the stud indicate that it was most probably broken for some time prior to the incident. Marks on the cylinder head joint ring indicate that the failure of the seal was progressive rather than sudden.

6.5 It is likely that extra stress on the engine as the vessel stood out to sea under the prevailing weather conditions precipitated the final failure of the joint ring.

6.6 The engine manufacturers released a technical service bulletin dated 30-11-1998 advising engine repairers, owners and operators of the need to change the O-ring seal and to change the screw when corrosion pits exceed 0.1mm on the screw. The service bulletin did not specify that the stud should be removed for inspection (See Appendix 8.5). It would be impossible to determine the depth of pitting without removal of the stud.

6.7 The loss of cooling water affected all four main engines. If the cooling water cross connection valves V15 and V36 had been shut it is likely that only the port side cooling system would have been affected (No 2 & 4 main engines, No 3 generator). It was normal practice to close these valves if they had been opened following a period in port when running the starboard generators to keep the port side warm. There was no standing instruction or operating instruction requiring these valves to be closed.

6.8 It could not be determined when these valves were last opened. They were open at the time of the incident.

6.9 There was a considerable delay in restarting the main engines due to loss of air pressure whilst the compressors were shut off. The start air compressors were shut down for 20 – 30 minutes and air pressure dropped to 8 bar from a probable pressure of between 25 – 30 bar.

6.10 Running hour records for the start air compressors show that during the month of November / December 2002 total hours run were 818. This indicates that on average a start air compressor was running constantly to make up losses / usage.

6.11 Had the offline air receiver been put into use earlier, propulsion may have been restored sooner.

6.12 The actions of the bridge team were professional and timely and helped to ensure the best possible outcome from this incident.

6.13 The shore response was also professional and timely and helped to ensure the best possible outcome from this incident.

6.14 Had the vessels drift been different the outcome of this incident might have been more serious. The vessel was not carrying full passenger numbers. There is no sea going tug permanently stationed at Rosslare Europort.

6.15 Since the incident Stena Line U.K. and Stena Europe have implemented the following measures:

The Senior Chief Engineers standing orders and the engine room pre-departure checklist have been altered to reflect the importance of checking the status of the cross-connecting valves.

A 'reminder sign' has been placed in a prominent position in the Engine Control Room.

Weekly maintenance routines have been altered to include a check of all main engine cylinder head studs.

Investigation by the ships engineers revealed two leaks on the clutch air system, which were promptly repaired.

The cooling water system for the start air compressors has been altered to remove the risk of air entering the LT-HT systems from the compressed air system removing the need to stop them as a possible cause of contamination.

7. RECOMMENDATIONS

7.1 Operators of vessels and/or engines of this type are recommended to copy the safeguards implemented by Stena Line U.K. in response to this incident.

7.2 Regular checks should be made of all running and standby plant for abnormal running conditions and failure of critical parts. Relieving engineers must be informed of the operating status of all machinery including any adjustments or alterations made during the course of the previous watch and these should be recorded. The requirements for watchkeeprs are contained in STCW 95 Chapter VIII Regulation VIII/2 and STCW Code Chapter VIII Section A-VIII/2

7.3 Wartsila NSD are recommended to re-issue service letter Document No 3212S034GB dated 30.11.1998 and include specific instructions to remove and inspect Cylinder Head Screws 100 094 at each piston overhaul.

7.4 Stena Line U.K. and marine engineers are recommended to pay particular attention to start air pressure systems with regard to efficiency of the compressors and identification of leaks. Air pressure systems are becoming increasingly complex. An accumulation of small leaks can rapidly deplete the charge in an air receiver.

7.5 Air pressure systems should be regarded as critical systems and instructions placed on board identifying the consequences of their failure and measures to be implemented to restore the system.

7.6 Marine Engineers should make themselves fully aware of the operational status of all machinery under their control and not delay in bringing standby systems into operation.

7.7 Stena Line U.K. and marine engineers are recommended to identify and highlight the minimum starting air pressure required for each of the engines under their control in order to avoid false or wasted starts.

8. APPENDICES

8.1 Schematic LT HT systems

8.2 Weather report

8.3 Chart extracts

8.4 Pre sailing checks original and revised

8.5 Service letter

Appendix 8.1

Schematic LT HT systems

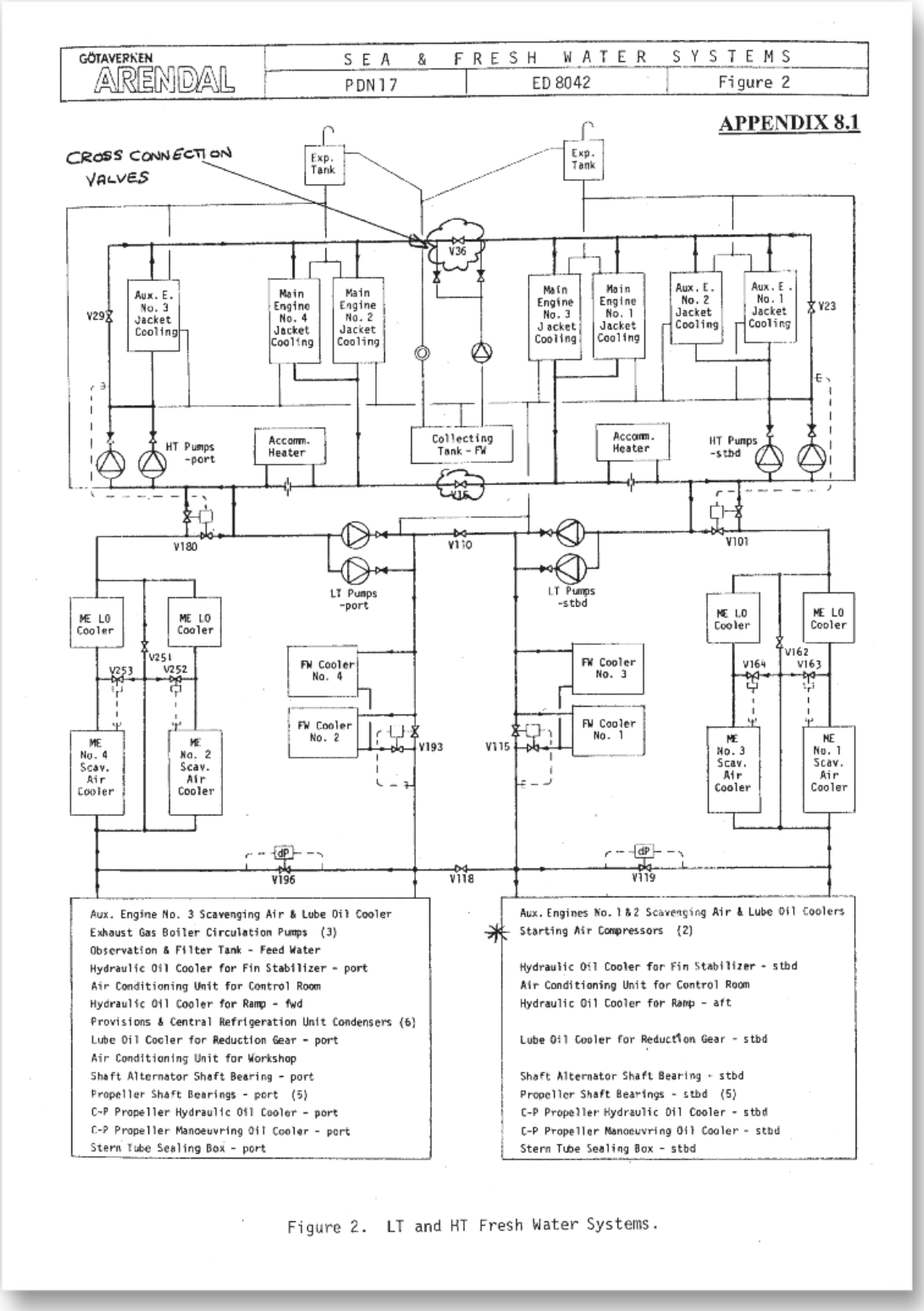

Figure 2. LT and HT Fresh Water Systems.

Appendix 8.2

Weather report.

APPENDIX 8.2

MET ÉIREANN
The Irish Meteorological Service

Glasnevin Hill,
Dublin 9, Ireland.

Cnoc Glas Naíon,
Baile Átha Cliath 9, Éire.
www.met.ie

Tel: +353-1-806 4200
Fax: +353-1-806 4247
E-mail: met.eireann@met.ie

Weather Report for the sea area between Rosslare Harbour and the Tuskar Rock Lighthouse on the 30th January 2003 between 12 and 14 hours

General Situation

A cold Northerly airflow covered the area.

Details:

Winds: Northerly Force 7 to Gale Force 8

Weather: sunny, dry (although there were some showers further east)

Visibility: good

Seas: Rough (wave model output confirmed by observations = 3.6 significant wave height)

Note:
Rosslare station winds were as follows:-
12 hours northerly, 27 knots gust 44 knots
13 hours northerly, 30 knots gust 49 knots
14 hours northerly, 29 knots gust 45 knots

Appendix 8.3

Chart extracts.

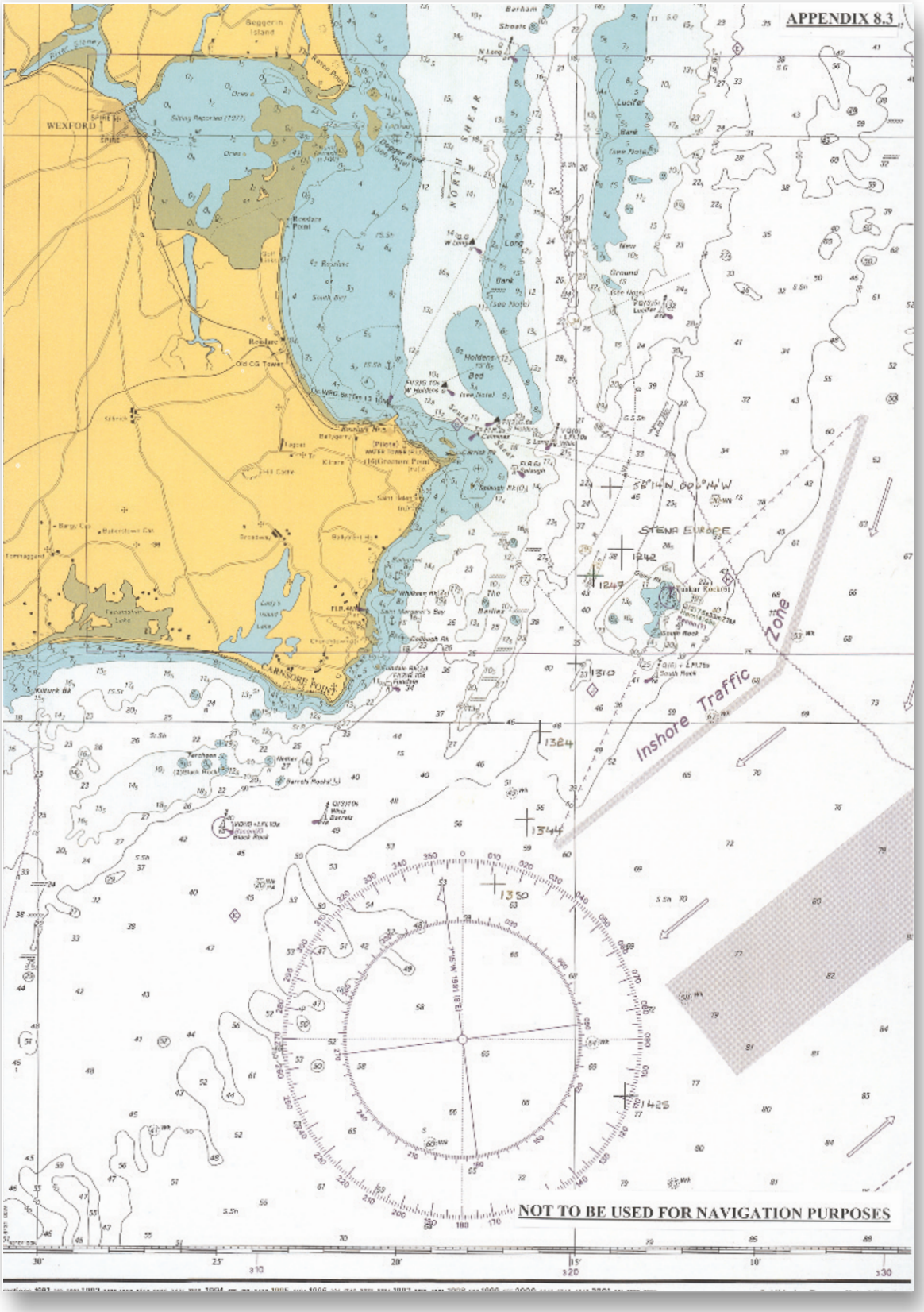

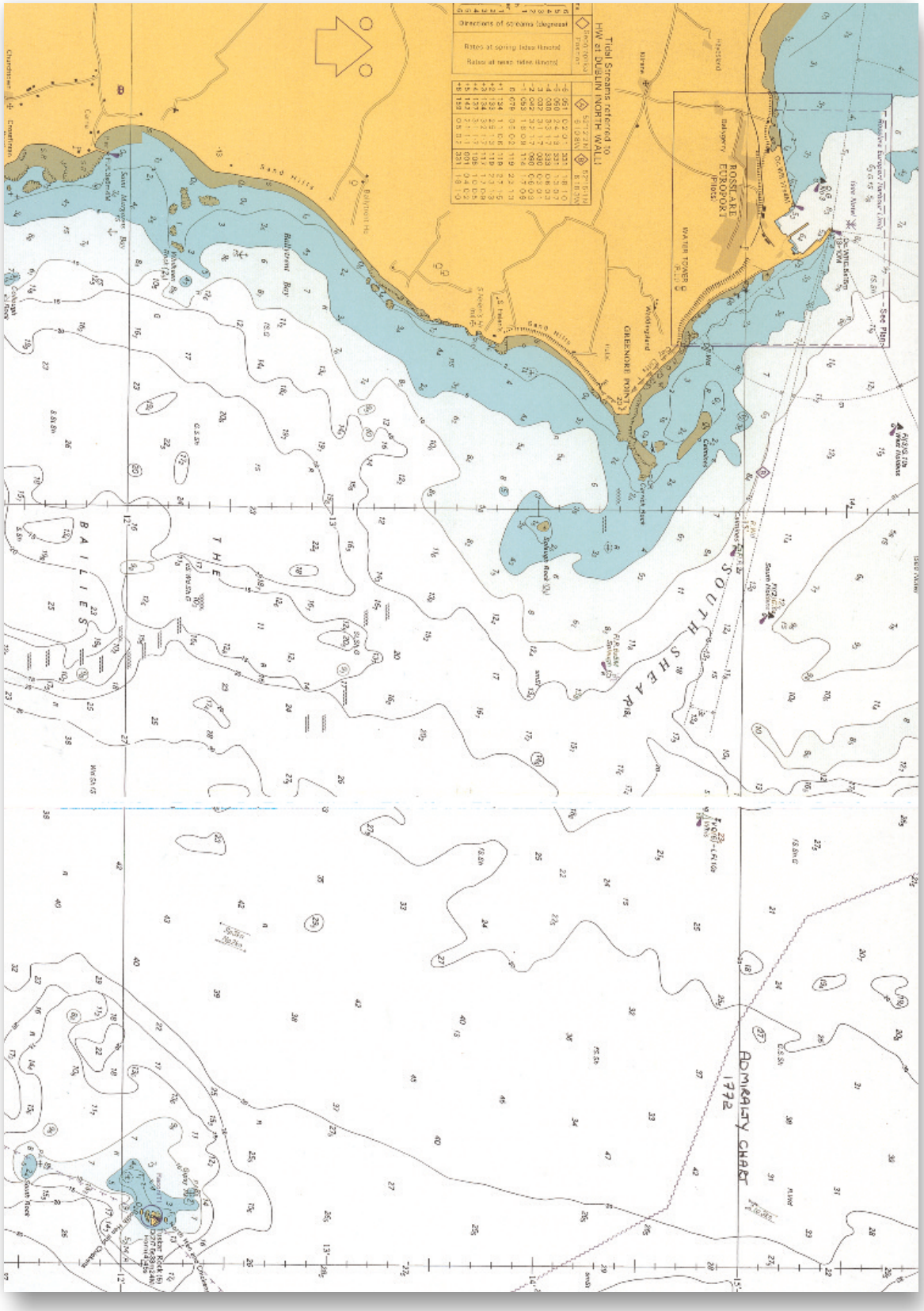
Tidal Streams referred to HW at DUBLIN (NORTH WALL)
Directions of streams (degrees)
Rates at spring (tides (knots)
Rates at neap (tides (knots)
ROSSLARE EUROPORT (PIER)
WATER TOWER
GREENORE POINT
Sand Hills
Ballyverne Bay
Saint Margaret Bay
BAILIES
THE
SOUTH SHEAR
See Plan
ADMIRALTY CHART
1772

Appendix 8.4

Pre sailing checks original and revised.

APPENDIX 8.4

STENA LINE SHIP MANAGEMENT — SENIOR CHIEF ENGINEERS STANDING ORDERS

Subject Title :- MACHINERY PRE-SAILING CHECKS

m.v. STENA EUROPE — Change Date ORIGINAL No. :- 01

STENA EUROPE

Engine Room PRE-SAILING CHECK LIST

ITEM	CHECK
Test combinators & synchronize clocks with bridge	
Test engine telegraphs weekly with bridge	
Test bridge/control room talk back weekly	
Test steering gear and auto pilot	
Turn main engines as per S.C.E. standing order 01.02 (n)	
Check alarm monitor for alarms & functioning correctly	
Check sufficient electrical power on switch board	
Check fuel tanks for crossing	
Ensure all relevant pumps are running for M.E. and Aux.	
Ensure E.R. fans are running	
Check position of bow thrusters power supply (shaft or main board)	
Check the number of engines required by the Master	
Start M.E. as per procedure in S.C.E. standing orders	
Enter in E.R. log book *pre-sailing* checks carried out	

NOTE: Check M.E. room after starting engines that all is well before changing engine control to Bridge

File No. S.C.E.S.O. 004 — Page 2 of 2 — DECEMBER 2002 — Original Issued

STENA LINE SHIP MANAGEMENT SENIOR CHIEF ENGINEERS STANDING ORDERS

Subject Title :- MACHINERY PRE-SAILING CHECKS

m.v. STENA EUROPE Change Date FEB 03 No. :- 03

STENA EUROPE

Engine Room PRE-SAILING CHECK LIST

ITEM	CHECK
Test combinators & synchronize clocks with bridge	
Test engine telegraphs weekly with bridge	
Test bridge/control room talk back weekly	
Test steering gear and auto pilot	
Turn main engines as per S.C.E. standing order 01.02 (n)	
Check High Temperature "Cross Over Valves" closed	
Check alarm monitor for alarms & functioning correctly	
Check sufficient electrical power on switch board	
Check fuel tanks for crossing	
Ensure all relevant pumps are running for M.E. and Aux.	
Ensure E.R. fans are running	
Check position of bow thrusters power supply (shaft or main board)	
Check the number of engines required by the Master	
Start M.E. as per procedure in S.C.E. standing orders	
Enter in E.R. log book *pre-sailing* checks carried out	

NOTE: Check M.E. room after starting engines that all is well before changing engine control to Bridge

File No. S.C.E.S.O. 004 Page 2 of 2 DECEMBER 2002 Original Issued

Appendix 8.5

Service letter.

APPENDIX 8.5

WÄRTSILÄ NSD
CORPORATION

SERVICE LETTER

Service, Wärtsilä NSD Finland Oy — Huoltokirje — Servicebrev

Engine section	Engine type	Ref.	Date	Issue	Document No.	Page
12 Cylinder head	**Vasa 32**	WNSFI–S	30.11.1998	01	3212S034GB	1(2)

Cylinder head screws (M56)

Spare Parts Number 100094.

Engine type This Service Letter concerns Wärtsilä Vasa 32 engines.

General In recent years there have been a few cases where the cylinder head screws have broken during operation. The result is blown-out cylinder head gasket, combustion gases entering cooling spaces and the engine shut-down due to high temperature in the HT-cooling water circuit. Normally, only renewing of gasket and screws is required. *See page 2 for instructions on when and how to change the screws.*

The major reasons for broken screws are:

- Corrosion of bottom part of screw (below O-ring 100095).

  The main reason for corroded screws is that the O-ring has deteriorated due to age and does not seal properly. Thus, water (e.g. while washing) will enter the compartment between screw and engine block and cause corrosion.

- Too high opening or loosening pressure used on hydraulic tool.

  Excess hydraulic tool pressure will not cause the screw to break immediately, but it will cause an initial crack, especially in a screw that is weakened by corrosion.

Letter distribution Wärtsilä NSD Service Network and owners/operators of Wärtsilä Vasa 32 engines.

Letter validity Until further notice.

Enclosure From the Wärtsilä Vasa 32 engine instruction manual:
Chapter 07, page 11 and 12.

Wärtsilä NSD Finland Oy, Service, Vaasa — P.O. Box 252 (Tarmaajantie 2), FIN-65101 Vaasa, Finland — Telecop. +358 6 356 7355, Telecop. +358 6 356 7366 — Tel. +358 6 3270, Telex 74251 wva fi
Wärtsilä NSD Finland Oy, Service, Turku — P.O. Box 50 (Siltamäenkatu 45), FIN-20811 Turku, Finland — Telecop. +358 2 264 3279, Telecop. +358 2 264 3410 — Tel. +358 2 264 3111, Telex 62640 wdf fi
Registered in Finland No. 465.942, Registered Office: Vaasa

Service, Wärtsilä NSD Finland Oy

Service letter

Issue	Document No.	Page
01	3212S034GB	2(2)

Instructions

Wärtsilä NSD recommends the following actions:

- Change the cylinder head screw whenever it has been over-tightened (whenever max. tightening or loosening pressure has been exceeded). Refer to the enclosure.
- Change the O-ring (100095) at every piston overhaul.

If corrosion damages occur, the following should be done:

- Corrosion pits with a depth of less than 0.1 mm: Grind/polish away the pits with a small hand grinder.
- Corrosion pits with a depth of more than 0.1 mm: Change the screw.

NOTE

Corrosion depth in threads can be hard to determine, thus it is recommended to change the screw, whenever in doubt.

Mounting of cylinder head screw

1. Put lubricating oil on the threads of the screw.
2. Mount the screw and tighten to specified torque.
3. Fill the compartment between screw and engine block with lubricating oil.
4. Mount the O-ring.

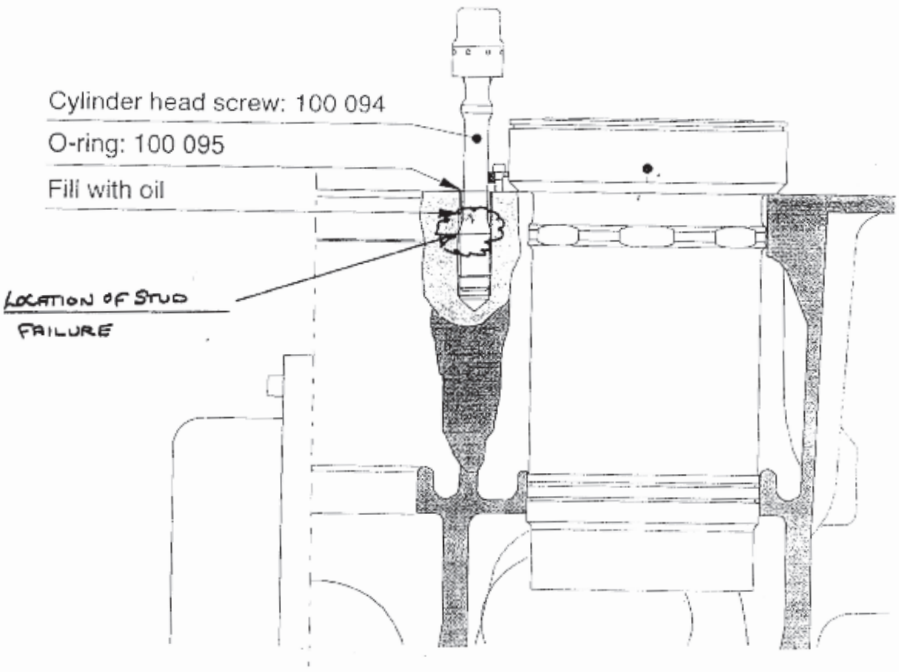

NOTES